art. no. LAT-KR-S-08G

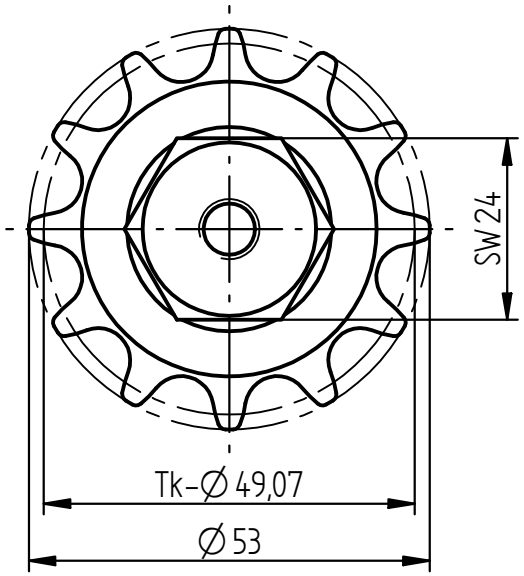

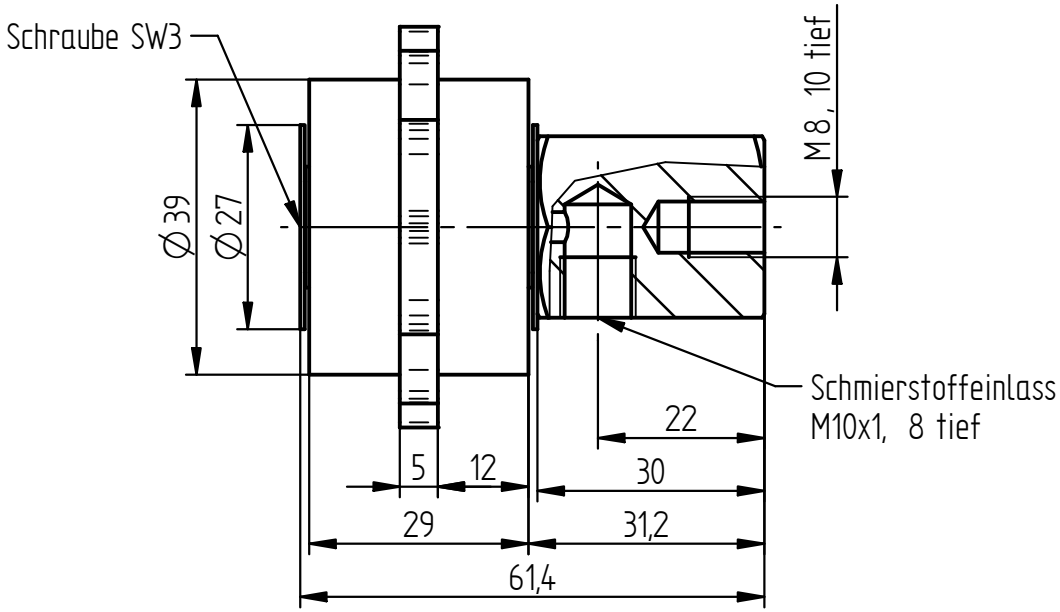

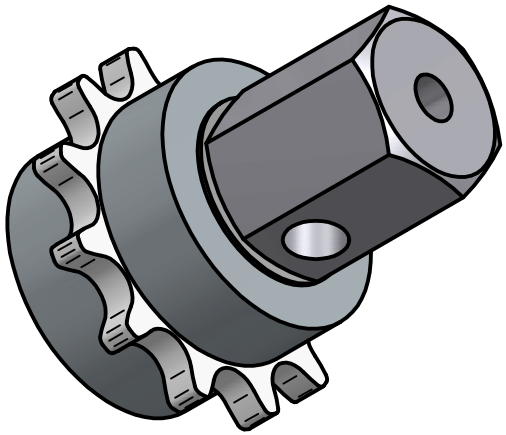

GRUETZNER
AUTOMATIC LUBRICATION