art. no. LAT7084G

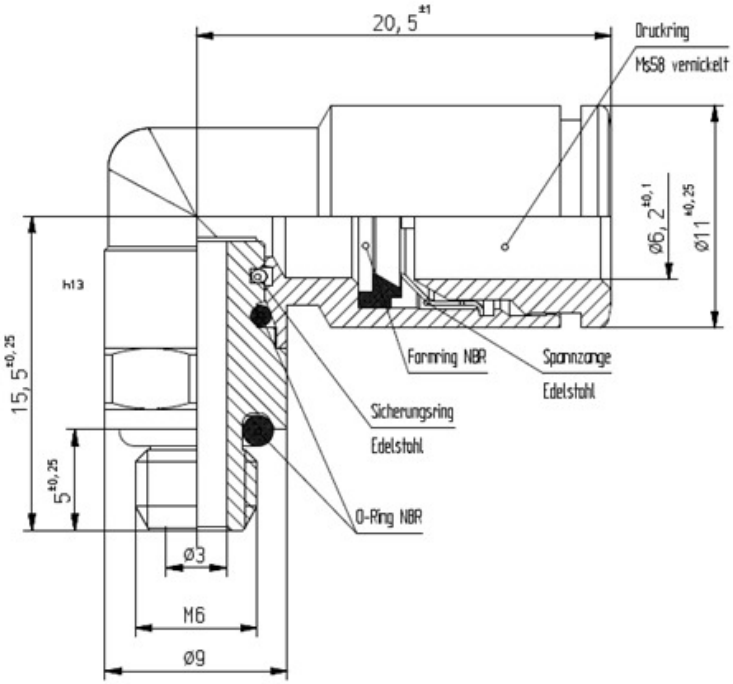

GRUETZNER
AUTOMATIC LUBRICATION