art. no. LAT-A-2G

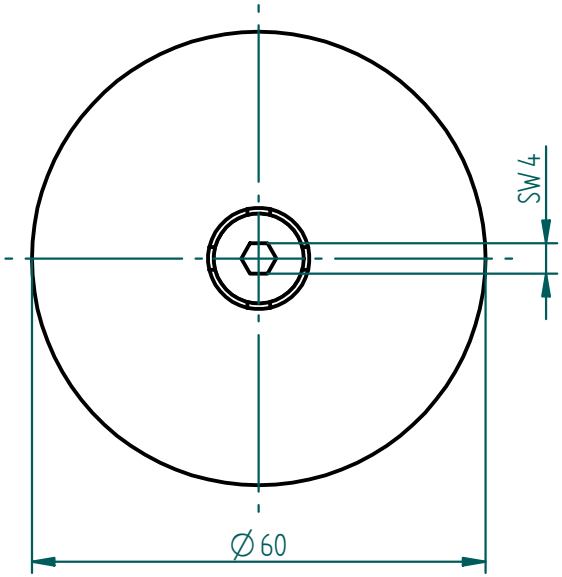

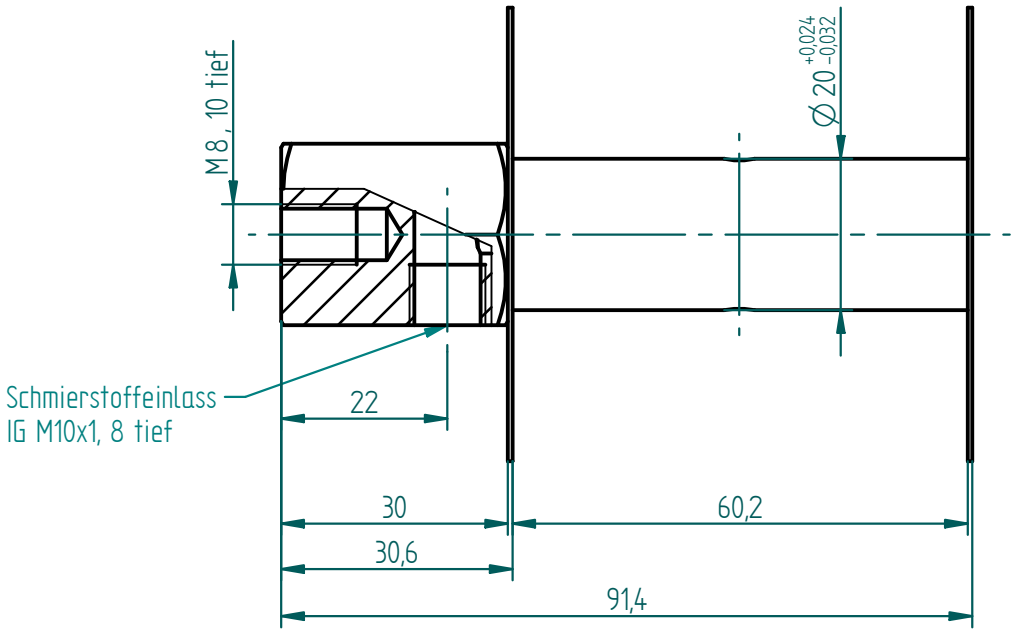

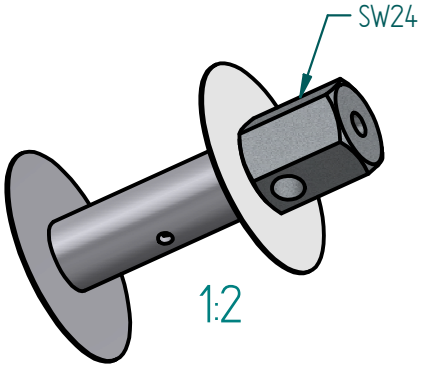

GRUETZNER
AUTOMATIC LUBRICATION